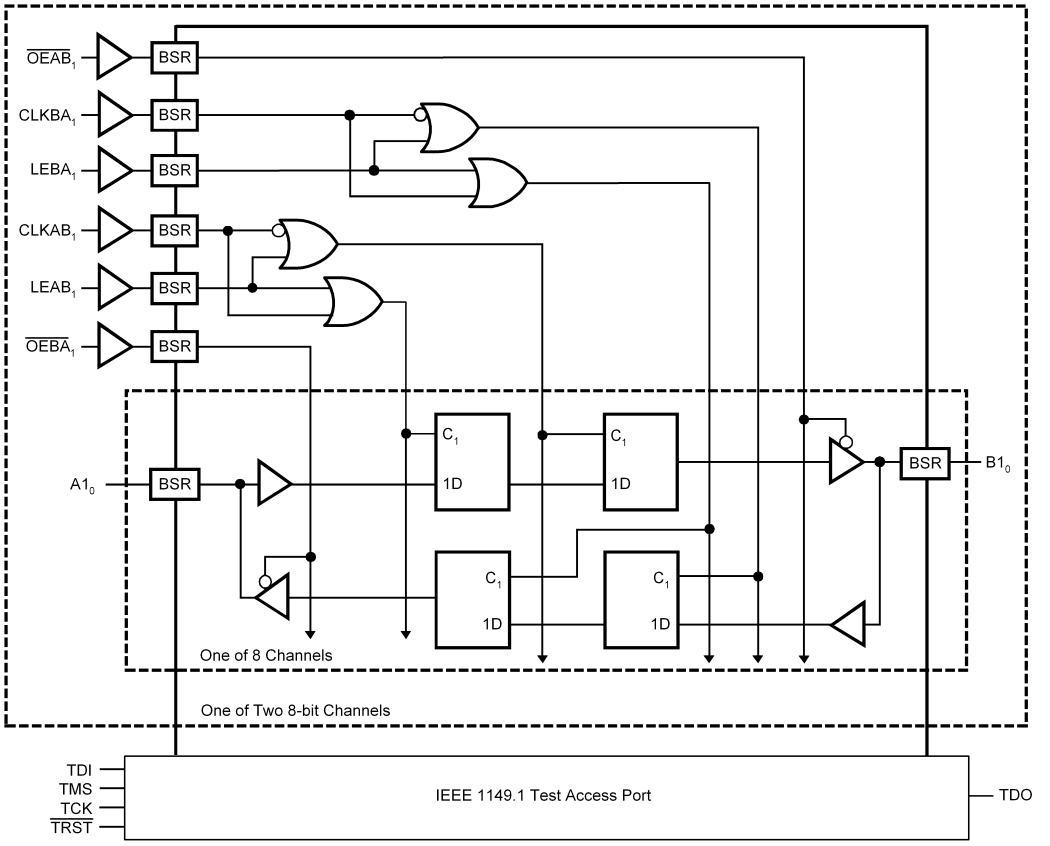
$\overline{OEAB}_1$
$CLKBA_1$
$LEBA_1$
$CLKAB_1$
$LEAB_1$
$\overline{OEBA}_1$
BSR
$A1_0$
$B1_0$
C_1
1D
One of 8 Channels
One of Two 8-bit Channels
TDI
TMS
TCK
$\overline{TRST}$
IEEE 1149.1 Test Access Port
TDO